							SYM	REVISED DESCRIPTION	REV. No.	DATE	CHECKED
						APPLICATION	4				
							3				
							2				
						변경	1				
F	E	D	C	B	S	P/No.	DWG No.	ITEM	MATERIAL	MAT'L SIZE	WEIGHT	REMARKS

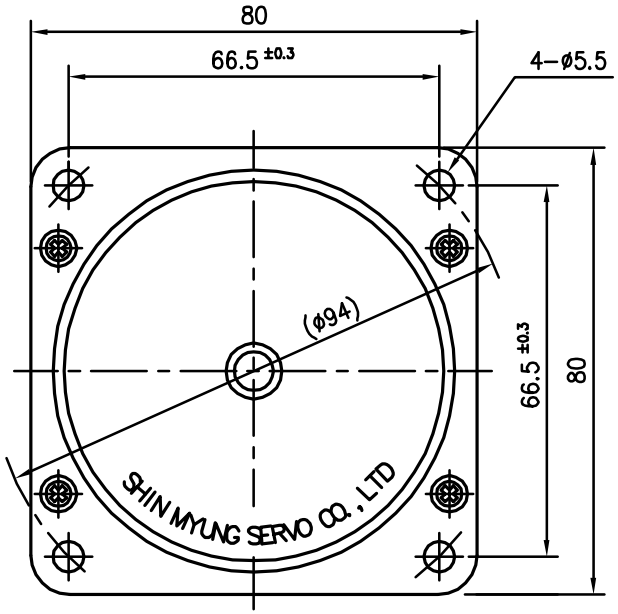

8IN25GN4C-V	
Type	Speed control Induction Motor
Power	AC220V~240V 50Hz
Output	25 W
Poles	4 Poles
Duty	Continuous
Insulation Class	B
Condenser Cap.	450Vac. 1.2Mfd.
Lead wire	UL3266 AWG20
Rotation	CW, CCW
Thermal protector	Open.Temp. 135℃ ±5℃

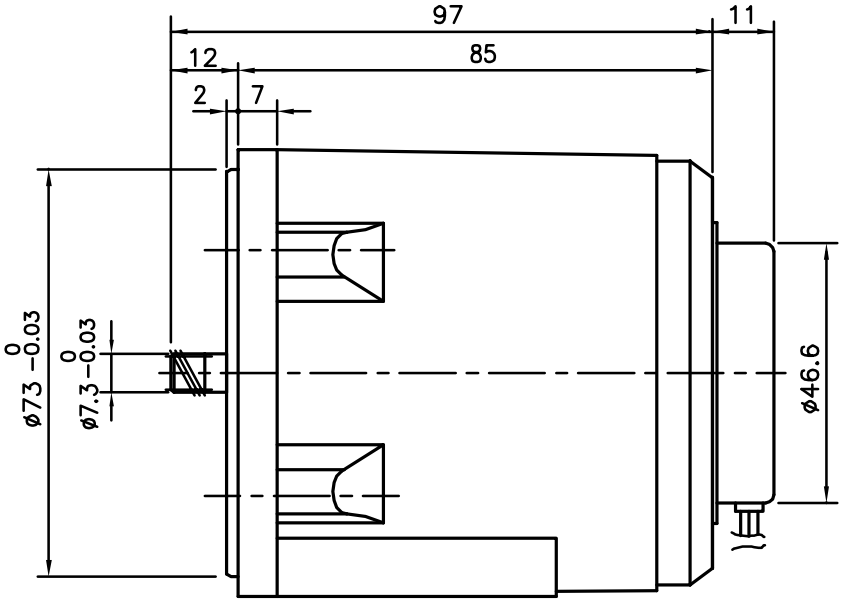

Wiring Diagram
(LOAD SIDE VIEW)

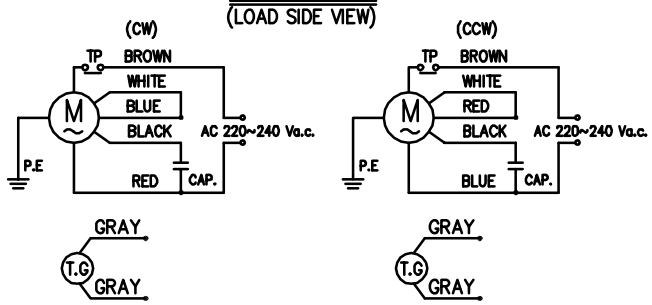

ACCP. TOL mm	DIMENSION	J	K	L	M	N	ANGLE JKL	ANGLE MN
	--- 10	0.05	0.2	0.3	0.5	0.7	0.7°	6°
	10 --- 30	0.1	0.3	0.5	0.8	1.2		
	30 --- 50	0.2	0.4	0.6	1.1	2.0	30'	2°
	50 --- 150	0.3	0.6	0.8	1.4	2.5		
	150 --- 300	0.4	0.8	1.0	1.7	3.5	15'	1°
	300 --- 500	0.6	1.2	1.5	2.0	4.5		
	500 ---	0.8	1.6	2.0	2.5	6.0	5'	30'

SCALE	1 / 1	TRIANGLE METHOD DWG		PARTS NAME	MOTOR OUTLINE
UNIT	mm				
DRAWN BY	DESIGNED BY	CHECKED BY	APPROVED BY	DRAWING No.	

SMS SHINMYUNG SERVO CO., LTD.